PROVIDES HIGH QUALITY VIDEO OUTPUT, OVER SCAN ELIMINATION, and VIDEO LEVEL ADJUSTMENT

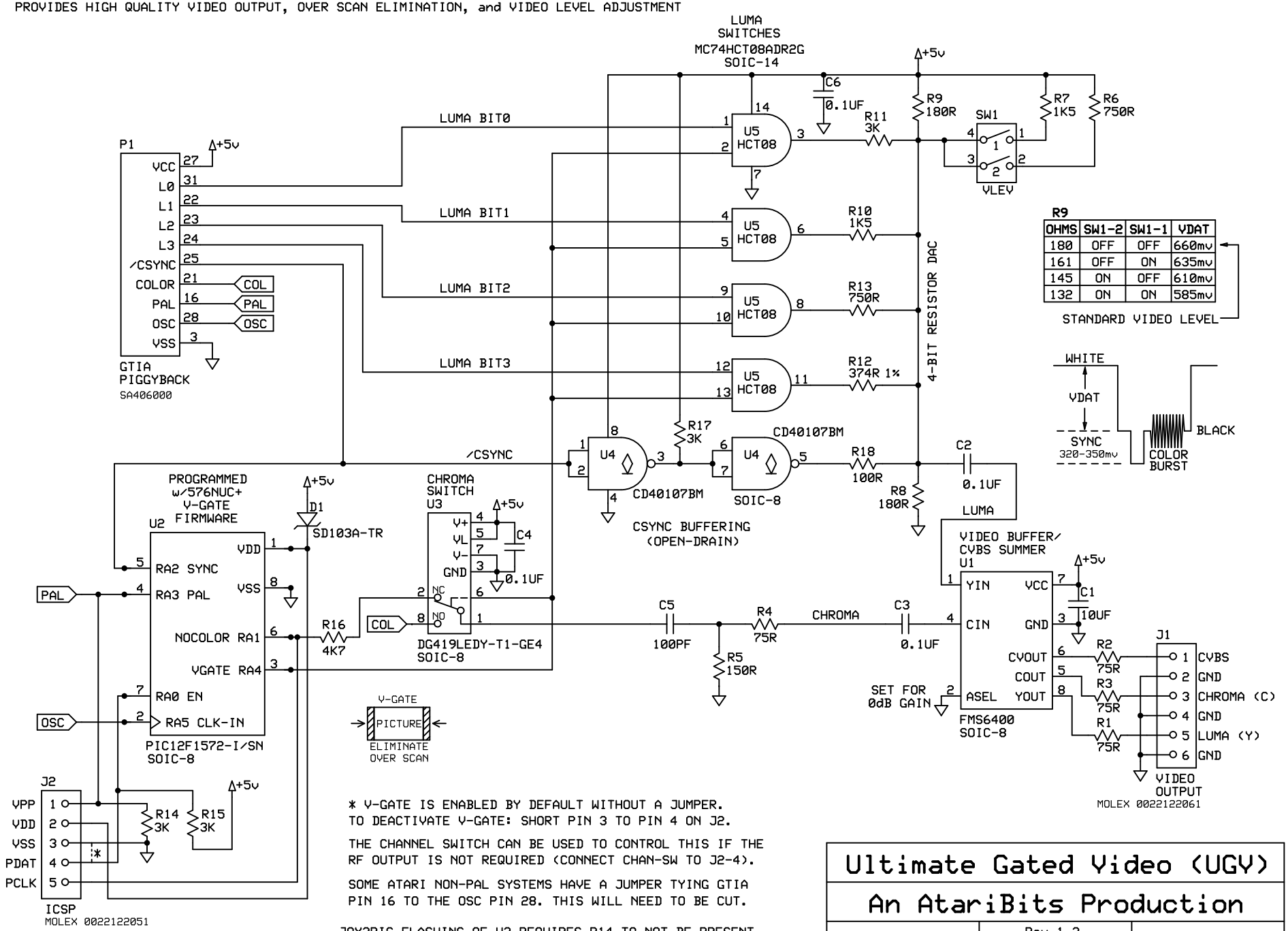

R9

OHMS	SW1-2	SW1-1	VDAT
180	OFF	OFF	660mv
161	OFF	ON	635mv
145	ON	OFF	610mv
132	ON	ON	585mv

STANDARD VIDEO LEVEL

* Y-GATE IS ENABLED BY DEFAULT WITHOUT A JUMPER.
TO DEACTIVATE Y-GATE: SHORT PIN 3 TO PIN 4 ON J2.

THE CHANNEL SWITCH CAN BE USED TO CONTROL THIS IF THE RF OUTPUT IS NOT REQUIRED (CONNECT CHAN-SW TO J2-4).

SOME ATARI NON-PAL SYSTEMS HAVE A JUMPER TYING GTIA PIN 16 TO THE OSC PIN 28. THIS WILL NEED TO BE CUT.

JOY2PIC FLASHING OF U2 REQUIRES R14 TO NOT BE PRESENT.

Ultimate Gated Video (UGV)

An AtariBits Production

MYTEK	Rev 1.3 3/05/2023	Page # 1 of 1

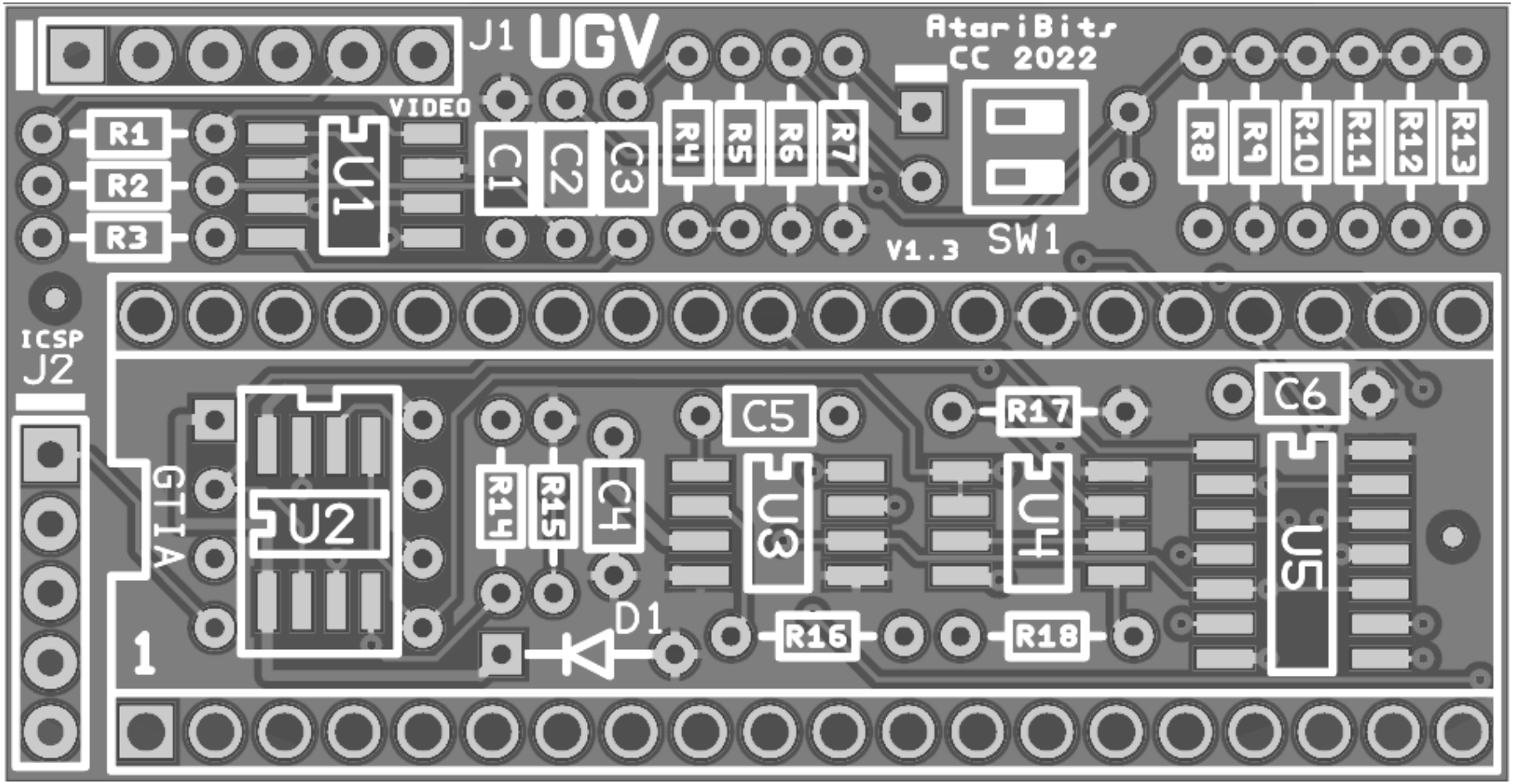
J1
UGV
AtariBits
CC 2022
VIDEO
R1
R2
R3
U1
C1
C2
C3
R4
R5
R6
R7
V1.3
SW1
R8
R9
R10
R11
R12
R13
ICSP
J2
GTIA
U2
R14
R15
C4
C5
U3
R17
U4
C6
U5
D1
R16
R18
1